HALOGUARD IR
SYSTEM LAYOUT

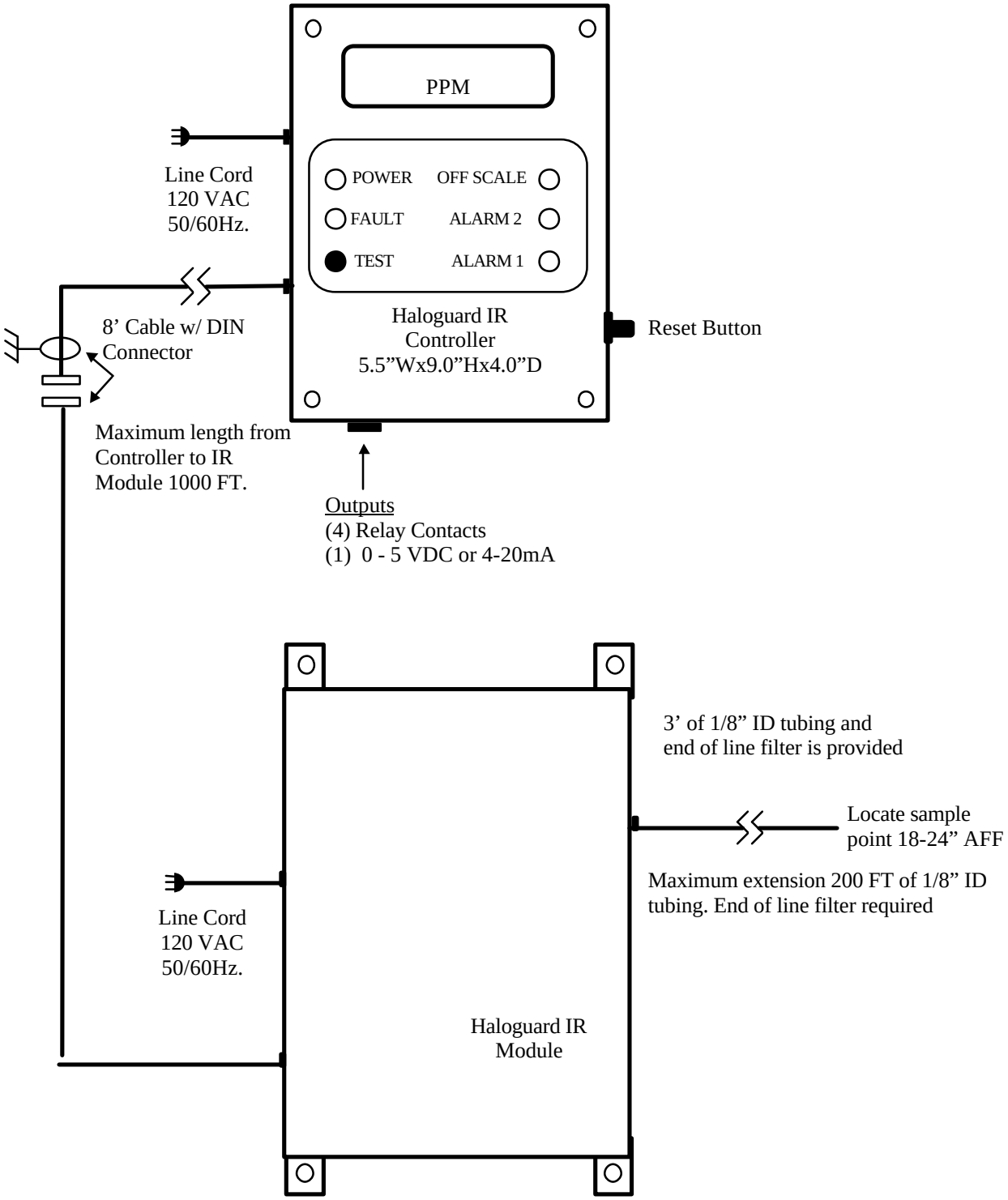

Hirlayout 8/17/95